Quick•Point®, Centering Studs

25 x 32 mm

Item No. 452532

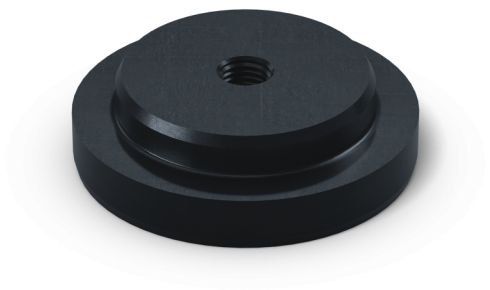

Dimensions	⌀ 25 x 32 mm
Packaging Unit	1 Stück
Weight	0.05 kg
Material	Stahl

25 x 32 mm
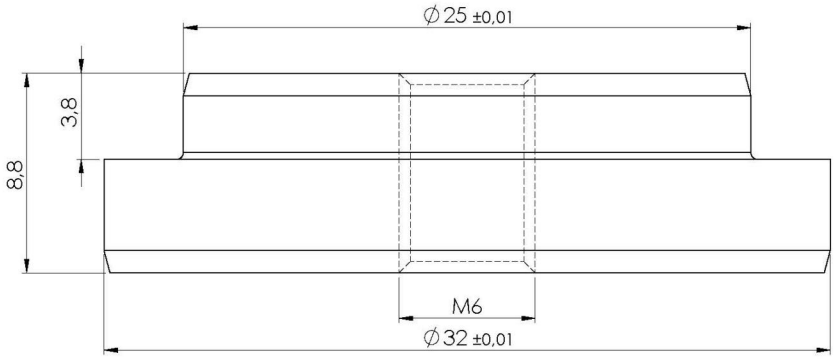
Item No. 452532