Makro•Grip® FS 125, Center Jaw + Spindle

jaw width 125 mm, jaw thickness 27 mm, spindle length 164 mm

Item No. 48155-TG2527 FS

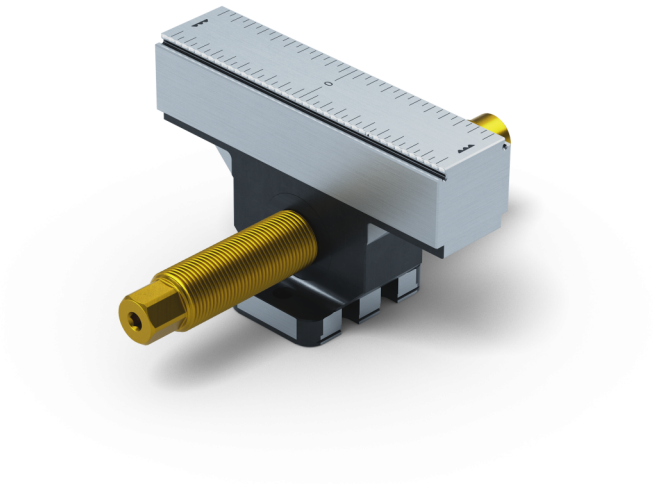

Spindle length	164 mm (6.46")
Clamping range	2 x 60 mm (2.36")
Thread pitch	M20 x 1.5
Dimensions	Jaw width: 125 mm (4.92")
Workpiece shape	prismatic
Packaging Unit	1 Piece
Weight	1.77 kg (3.9 lbs)

Makro•Grip® FS 125, Center Jaw + Spindle

jaw width 125 mm, jaw thickness 27 mm, spindle length 164 mm
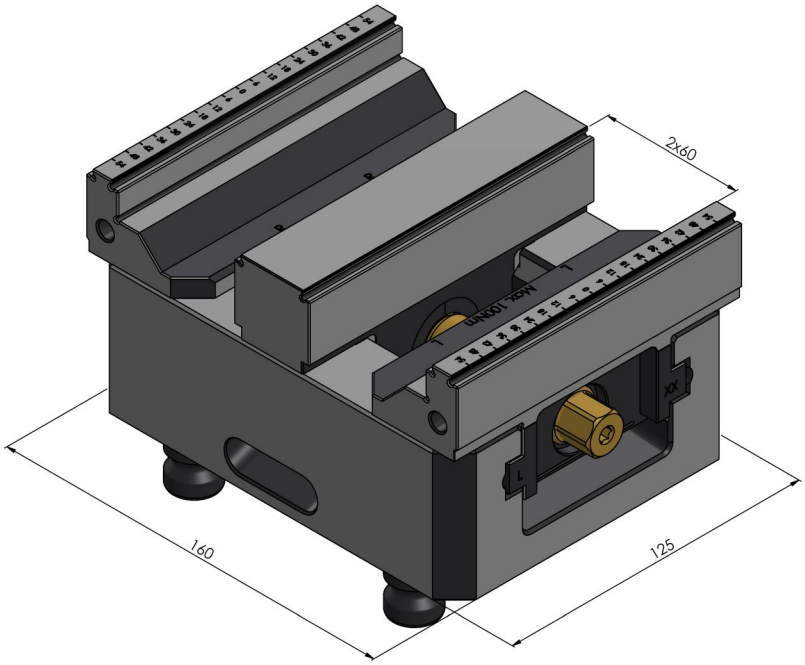
Item No. 48155-TG2527 FS