Makro•Grip® FS 125, Center Jaw + Spindle

jaw width 125 mm, jaw thickness 27 mm, spindle length 214 mm

Item No. 48205-TG2527 FS

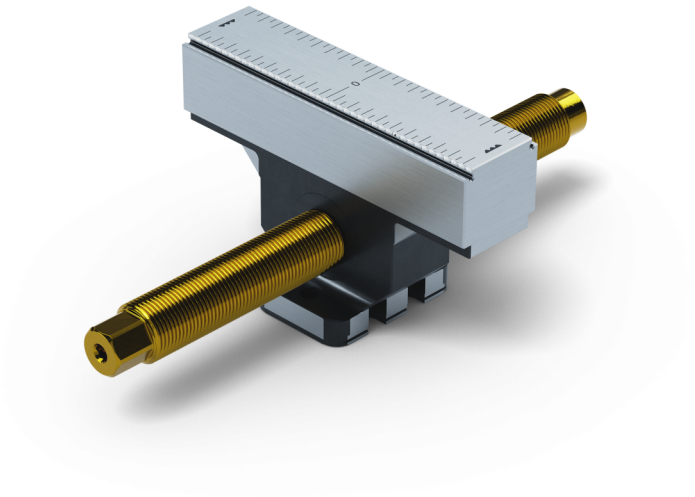

Spindle length	214 mm (8.43")
Clamping range	2 x 85 mm (3.35")
Thread pitch	M20 x 1.5
Dimensions	Jaw width: 125 mm (4.92")
Workpiece shape	prismatic
Packaging Unit	1 Piece
Weight	1.87 kg (4.12 lbs)
Material	Steel

Makro·Grip® FS 125, Center Jaw + Spindle

jaw width 125 mm, jaw thickness 27 mm, spindle length 214 mm
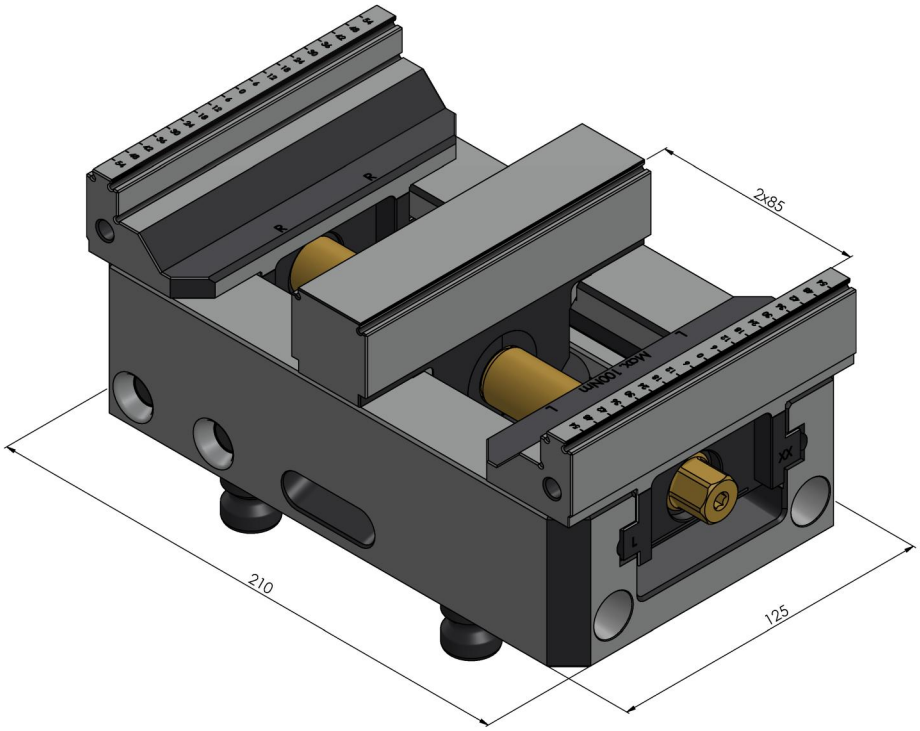
Item No. 48205-TG2527 FS