Makro•Grip® FS 125, Center Jaw + Spindle

jaw width 125 mm, jaw thickness 27 mm, spindle length 314 mm

Item No. 48305-TG2527 FS

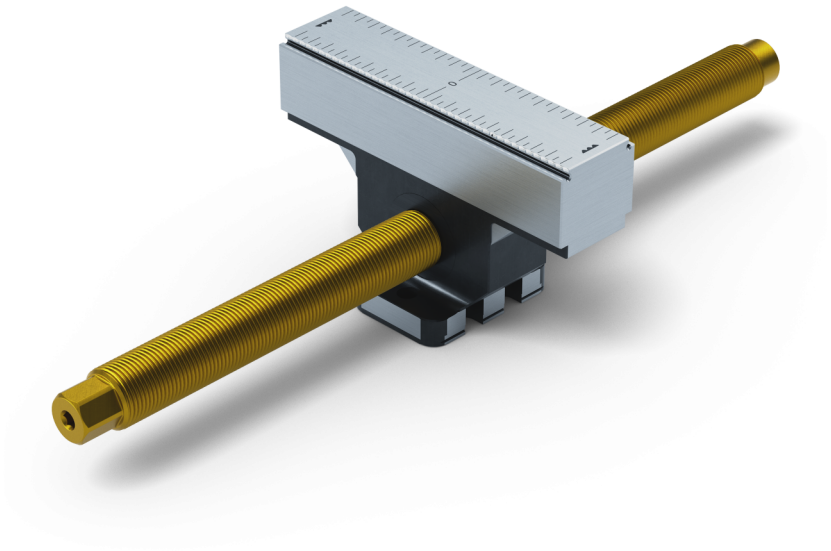

Spindle length	314 mm (12.36")
Clamping range	2 x 135 mm (5.31")
Thread pitch	M20 x 1.5
Dimensions	Jaw width: 125 mm (4.92")
Workpiece shape	prismatic
Packaging Unit	1 Piece
Weight	2.13 kg (4.7 lbs)
Material	Steel

Makro•Grip® FS 125, Center Jaw + Spindle

jaw width 125 mm, jaw thickness 27 mm, spindle length 314 mm
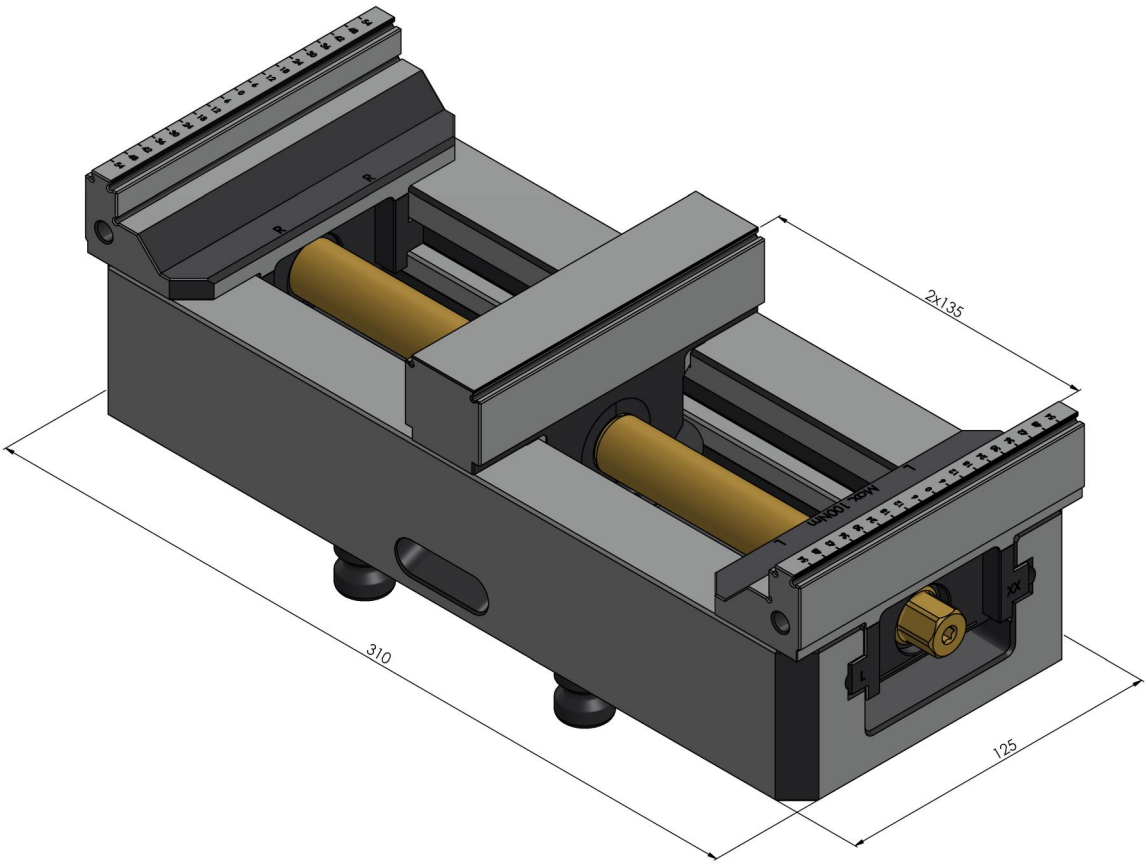
Item No. 48305-TG2527 FS